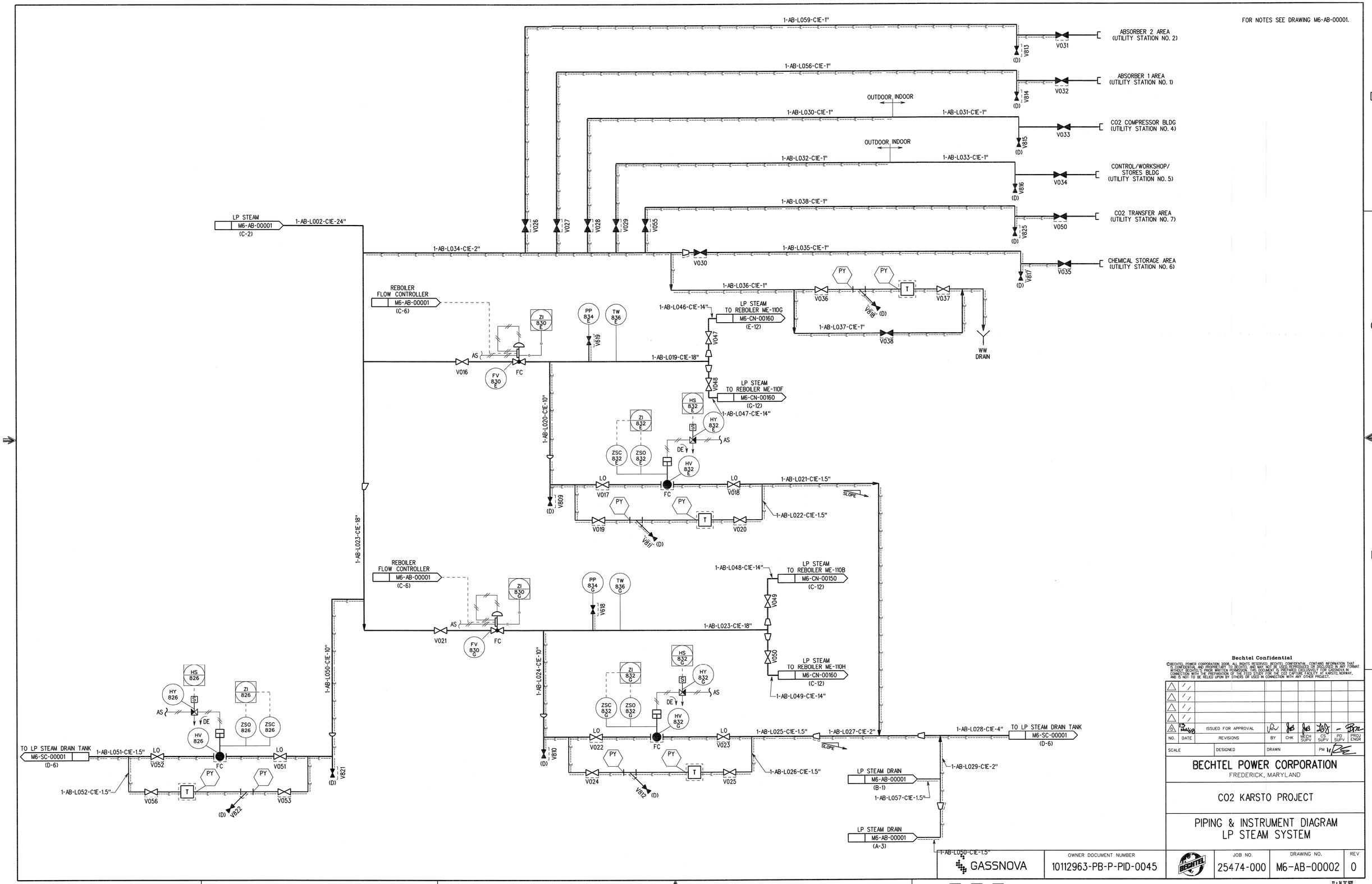
FOR NOTES SEE DRAWING M6-AB-00001.
ABSORBER 2 AREA (UTILITY STATION NO. 2)
ABSORBER 1 AREA (UTILITY STATION NO. 1)
CO2 COMPRESSOR BLDG (UTILITY STATION NO. 4)
CONTROL/WORKSHOP/ STORES BLDG (UTILITY STATION NO. 5)
CO2 TRANSFER AREA (UTILITY STATION NO. 7)
CHEMICAL STORAGE AREA (UTILITY STATION NO. 6)
OUTDOOR INDOOR
LP STEAM M6-AB-00001 (C-2)
1-AB-L002-C1E-24"
1-AB-L034-C1E-2"
1-AB-L035-C1E-1"
1-AB-L036-C1E-1"
1-AB-L037-C1E-1"
1-AB-L038-C1E-1"
1-AB-L059-C1E-1"
1-AB-L056-C1E-1"
1-AB-L030-C1E-1"
1-AB-L031-C1E-1"
1-AB-L032-C1E-1"
1-AB-L033-C1E-1"
1-AB-L046-C1E-14"
1-AB-L019-C1E-18"
1-AB-L047-C1E-14"
1-AB-L020-C1E-10"
1-AB-L021-C1E-1.5"
1-AB-L022-C1E-1.5"
1-AB-L023-C1E-18"
1-AB-L048-C1E-14"
1-AB-L049-C1E-14"
1-AB-L024-C1E-10"
1-AB-L025-C1E-1.5"
1-AB-L026-C1E-1.5"
1-AB-L027-C1E-2"
1-AB-L028-C1E-4"
1-AB-L029-C1E-2"
1-AB-L050-C1E-10"
1-AB-L051-C1E-1.5"
1-AB-L052-C1E-1.5"
1-AB-L057-C1E-1.5"
1-AB-L050-C1E-1.5"
REBOILER FLOW CONTROLLER M6-AB-00001 (C-6)
LP STEAM TO REBOILER ME-110G M6-CN-00160 (E-12)
LP STEAM TO REBOILER ME-110F M6-CN-00160 (G-12)
LP STEAM TO REBOILER ME-110B M6-CN-00150 (C-12)
LP STEAM TO REBOILER ME-110H M6-CN-00160 (C-12)
LP STEAM DRAIN M6-AB-00001 (B-1)
LP STEAM DRAIN M6-AB-00001 (A-3)
TO LP STEAM DRAIN TANK M6-SC-00001 (D-6)
WW DRAIN
SLOPE
Bechtel Confidential
©BECHTEL POWER CORPORATION 2008. ALL RIGHTS RESERVED. BECHTEL CONFIDENTIAL CONTAINS INFORMATION THAT IS CONFIDENTIAL AND PROPRIETARY TO BECHTEL AND MAY NOT BE USED, REPRODUCED OR DISCLOSED IN ANY FORMAT WITHOUT BECHTEL'S PRIOR WRITTEN PERMISSION. THIS DOCUMENT IS PREPARED EXCLUSIVELY FOR GASSNOVA IN CONNECTION WITH THE PREPARATION OF THE FEED STUDY FOR THE CO2 CAPTURE FACILITY AT KARSTO, NORWAY, AND IS NOT TO BE RELIED UPON BY OTHERS OR USED IN CONNECTION WITH ANY OTHER PROJECT.
NO. DATE REVISIONS BY CHK MECH SUPV CS SUPV PD SUPV PROJ ENGR
0 13 Nov 68 ISSUED FOR APPROVAL
SCALE DESIGNED DRAWN PM
BECHTEL POWER CORPORATION
FREDERICK, MARYLAND
CO2 KARSTO PROJECT
PIPING & INSTRUMENT DIAGRAM
LP STEAM SYSTEM
GASSNOVA
OWNER DOCUMENT NUMBER 10112963-PB-P-PID-0045
JOB NO. 25474-000
DRAWING NO. M6-AB-00002
REV 0
22 x 34 'D' SIZE
LEVELS